註解:
未標註之倒角均為C0.3

unit:mm

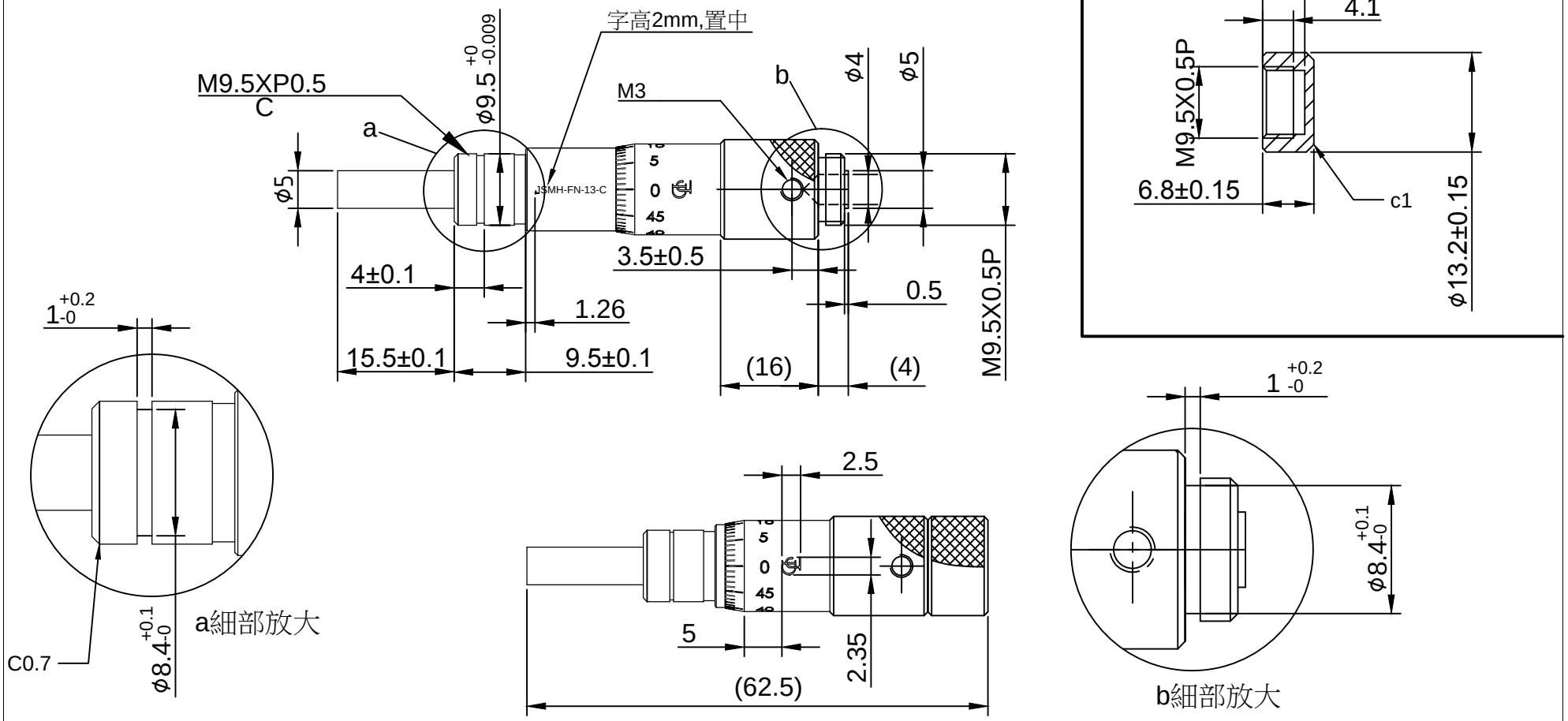

JIA DER INDUSTRIAL CO., LTD.

Type	Range	Graduation	Accuracy	With Clamp nut	Plain Stem
JSMH-FN-13-C	0-13mm	0.01mm	±2um	●	